# Data Sheet

Article number: 29560222785220
Description: Shaft mounted gear
A253S-227,8-P63B5

## Measures

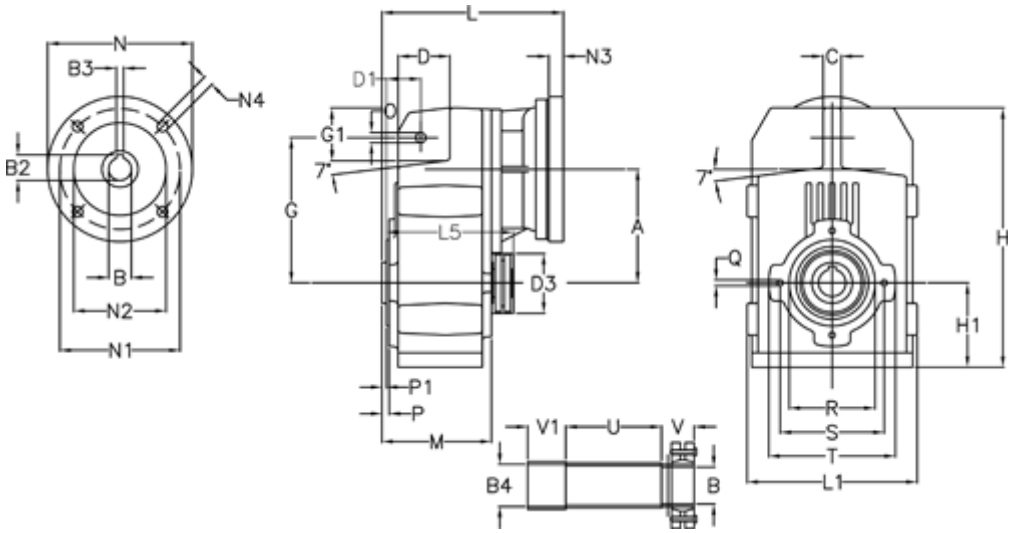


| | | | | |
|---|---|---|---|---|
| A = 128.75 | D1 = 43.5 | l5 = 197.5 | P1 = 3.5 | V1 = 40 |
| B = 31 | d3 = 83 | M = 135.5 | Q = M10x14 | |
| B1 = 11 | G = 162 | N = 140 | R = 110 | |
| B2 = 12.8 | G1 = 58.0 | N1 = 115 | S = 130 | |
| B3 = 4 | H = 290.5 | N2 = 95 | T = 150 | |
| B4 = 32 | H1 = 93.5 | N4 = M8x19 | Tightening torque N m = 14.5 | |
| C = 20 | L = 213.0 | O = 13 | U = 96.0 | |
| D = 57.0 | L1 = 188 | P = 6.0 | V = 38 | |

*Product drawings and brochures of any kind may contain errors for which Brd. Klee A/S cannot be liable.*